THIS DRAWING IS CONSIDERED AS APPROVED IF NO SPECIFIC INSTRUCTIONS ARE RECEIVED WITHIN 2 DAYS OF ITS FORWARDING

DO NOT SCALE

SHEATHED HEATING ELEMENTS HAVE A STANDARD TOLERANCE OF +/-1% ON LENGTH . TOLERANCE WILL BE TAKEN UP ON ANY INTERNAL BEND TO MAINTAIN MAJOR OUTSIDE DIMENSIONS - UNLESS OTHERWISE STATED - FOR CLARIFICATION PLEASE ASK!

IF IN DOUBT

ASK!

SCALE 1:4

SCALE 1:4

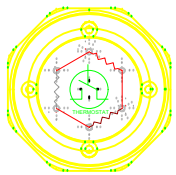

SCALE 1:4

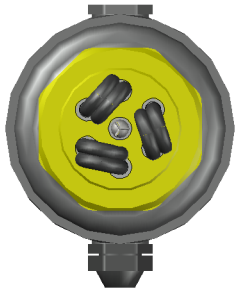

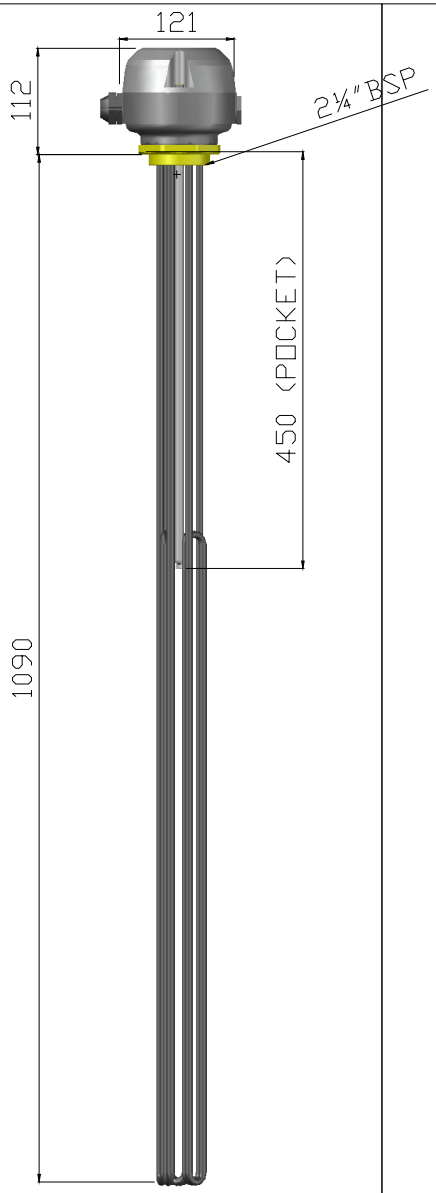

SCALE 1:8

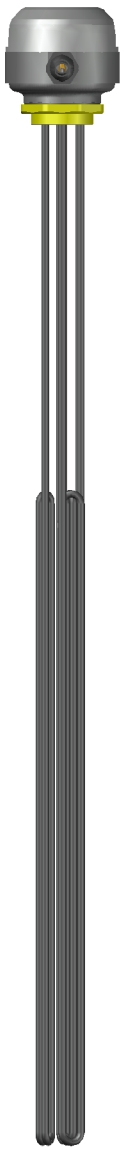

SCALE 1:8

SCALE 1:8

List of Xrefs:
FIBOX-ASSY-225SS [G:\CADCOMPONENTS\FIBOX-ASSY-225SS.dwg]
FISKIRT01 [G:\CADCOMPONENTS\FISKIRT01.dwg]
FITORP01 [G:\CADCOMPONENTS\FITORP01.dwg]
GIHEAD225SS-LINERLLED [\ , \CADCOMPONENTS\GIHEAD225.dwg]
FI-GASKET01 [G:\CADCOMPONENTS\FI-GASKET01.dwg]
GORING [G:\CADCOMPONENTS\GORING.dwg]
SCRBM8X125LCHKDB [G:\CADCOMPONENTS\SCRBM8X125LCHKDB.dwg]
GOLANDM25 [G:\CADCOMPONENTS\GOLANDM25.dwg]
TSGCOLLAR12SWG [G:\CADCOMPONENTS\TSGCOLLAR12SWG.dwg]
4BAX14MMX50MMCE-BEAD-NUT [G:\CADCOMPONENTS\4BAX14MMX50MMCE-BEAD-NUT.dwg]
BEADS8MM [G:\CADCOMPONENTS\BEADS8MM.dwg]
M5X4BASTUD [G:\CADCOMPONENTS\M5X4BASTUD.dwg]
FI-LINK020 [G:\CADCOMPONENTS\FI-LINK020.dwg]
FIBOX-ASSY [G:\CADCOMPONENTS\FIBOX-ASSY.dwg]
SCRM5X12TORXPANT [G:\CADCOMPONENTS\SCRM5X12TORXPANT.dwg]
SCRM5X12PCZSPANA [G:\CADCOMPONENTS\SCRM5X12PCZSPANA.dwg]
GIGLANDM25BLANK [G:\CADCOMPONENTS\GIGLANDM25BLANK.dwg]
WASHERM5 [G:\CADCOMPONENTS\WASHERM5.dwg]
FIBOXTILDY [G:\CADCOMPONENTS\FIBOXTILDY.dwg]
NUTM8AFULL [G:\CADCOMPONENTS\NUTM8AFULL.dwg]
POCKETTILDY [\ , \CADCOMPONENTS\POCKETTILDY.dwg]

COMPONENTS & REVISIONS é

IMMERSION HEATERS UK LTD ©
TEL 07897 246779

www.immersionheaters.uk
e-mail : sales@immersionheaters.uk

This drawing and information herein is confidential to TPKay (Holdings) Ltd. It is issued in confidence that it will not be disclosed to any third party in part or in whole without permission from TPKay (Holdings) Ltd.

Copyright 2022 TPKAY (HOLDINGS) LTD.

DESCRIPTION

IMM001 MULTI VIEW

24KW 415V 2¼"BSPX43" IMMERSION HEATER IP67 COVER
3XELEMENT LOOP TRIANGULAR
1X18"POCKET
BRASS HEAD
DELTA M5 TERMINALS
FI-LINK020 LINKS
21.52OHMPER ELEMENT
WATT DENSITY 63W/IN²

DRAWING No.
FI24043C3E1TDTBR.dwg

DATE
06/03/2026

PRINTED 6/3/2026 8:42 AM

DRAWN BY
EJ

Last Saved by Ellis.johnson

Date 06/03/26