THIS DRAWING IS CONSIDERED AS APPROVED IF NO SPECIFIC INSTRUCTIONS ARE RECEIVED WITHIN 2 DAYS OF ITS FORWARDING

DO NOT SCALE

SHEATHED HEATING ELEMENTS HAVE A STANDARD TOLERANCE OF +/-1% ON LENGTH . TOLERANCE WILL BE TAKEN UP ON ANY INTERNAL BEND TO MAINTAIN MAJOR OUTSIDE DIMENSIONS - UNLESS OTHERWISE STATED - FOR CLARIFICATION PLEASE ASK!

IF IN DOUBT

ASK!

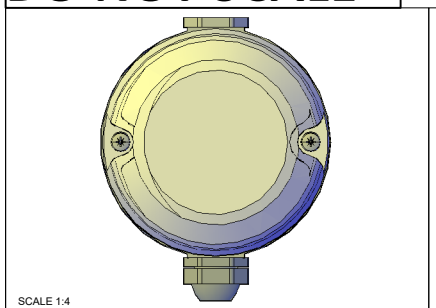

SCALE 1:4

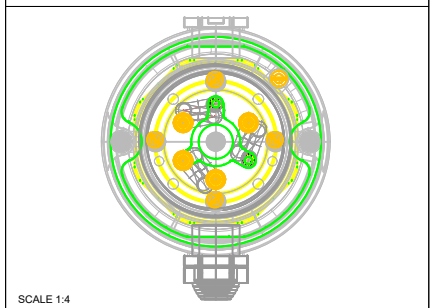

SCALE 1:4

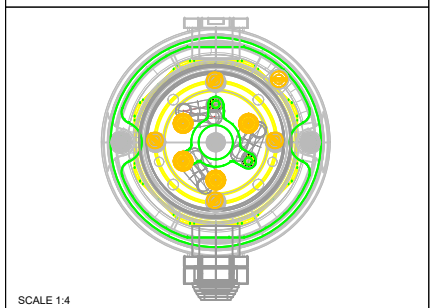

SCALE 1:4

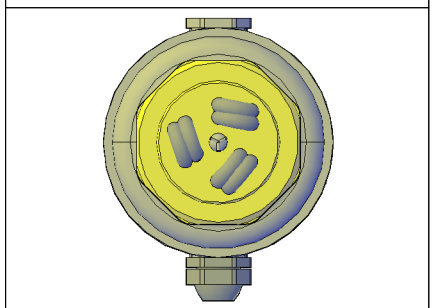

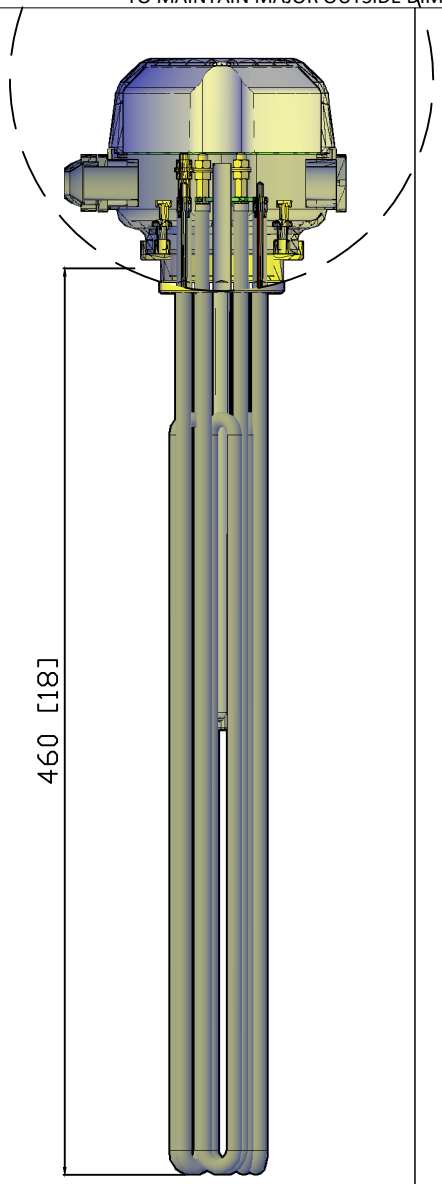

SCALE 1:4

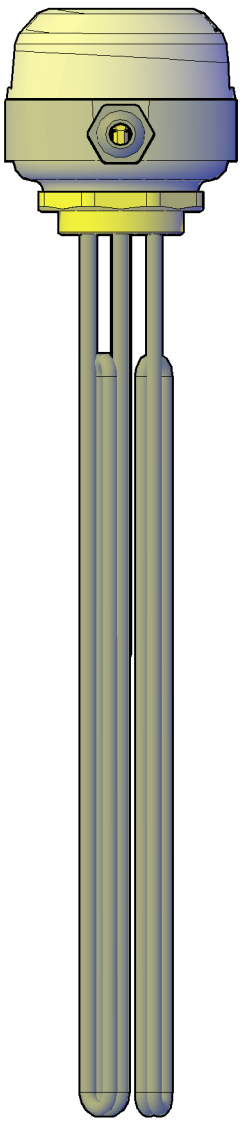

SCALE 1:4

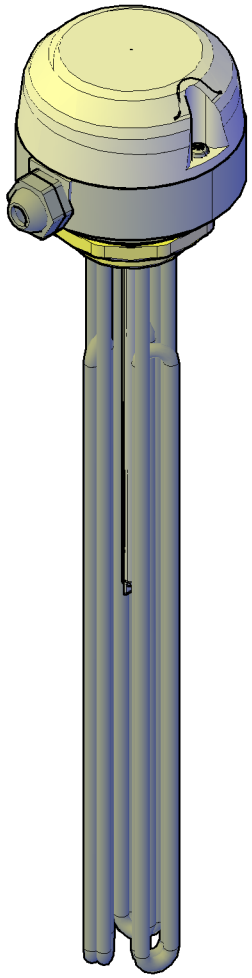

SCALE 1:4

29.08.2024 CORRECTED FROM 2"BSP XREF

List of Xrefs:
ClientApproval [G:\CADCOMPONENTS\ClientApproval.dwg]
FIBOX-ASSY-200 [.. \CADCOMPONENTS\FIBOX-ASSY-225.dwg]
FISKIRT01 [G:\CADCOMPONENTS\FISKIRT01.dwg]
FITOP01 [G:\CADCOMPONENTS\FITOP01.dwg]
GIORING [G:\CADCOMPONENTS\GIORING.dwg]
FI-GASKET01 [G:\CADCOMPONENTS\FI-GASKET01.dwg]
WASHERM6X12SLCHHDB [G:\CADCOMPONENTS\WASHERM6X12SLCHHDB.dwg]
WASHERM8A [G:\CADCOMPONENTS\WASHERM8A.dwg]
GIGLANDM25 [G:\CADCOMPONENTS\GIGLANDM25.dwg]
GIGLANDM25BLANK [G:\CADCOMPONENTS\GIGLANDM25BLANK.dwg]
BEADS8MM [G:\CADCOMPONENTS\BEADS8MM.dwg]
NUT1/8AFULL [G:\CADCOMPONENTS\NUT1/8AFULL.dwg]
POCKET1/1LOY [G:\CADCOMPONENTS\POCKET1/1LOY.dwg]
4BAX14MMX50MMCE-BEAD-NUT [G:\CADCOMPONENTS\4BAX14MMX50MMCE-BEAD-NUT.dwg]
FI-LINK020-STARY [G:\CADCOMPONENTS\FI-LINK020-STARY.dwg]
SCRMSX13PO25PANA [. . \CADCOMPONENTS\SCRMSX13PO25PANA.dwg]
4bar14mmxxmmce-bead-nut-m5-adaptor [. . \CADCOMPONENTS\4bar14mmxxmmce-bead-nut-m5-adaptor.dwg]
M5M8x40TUB [. . \CADCOMPONENTS\M5M8x40BASTUD.dwg]
M5M8x40STUD [. . \CADCOMPONENTS\M5M8x40STUD.dwg]
WASHERM5 [G:\CADCOMPONENTS\WASHERM5.dwg]
GHEAD225 [G:\CADCOMPONENTS\GHEAD225.dwg]

COMPONENTS & REVISIONS

29.08.2024 CORRECTED FROM 2"BSP XREF

IMMERSION HEATERS UK LTD ©
TEL 07897 246779

www.immersionheaters.uk
e-mail : sales@immersionheaters.uk

This drawing and information herein is confidential to TPFag (Eckley) Ltd. It is issued in confidence that it will not be disclosed to any third party in part or in whole without permission from TPFag (Eckley) Ltd.

Copyright 2023 TPFGT (ENGED) LTD.

DESCRIPTION

IMM001 MULTI VIEW

31.03.2019 REVISION REQUIRED TO LAYOUT
6KW 240/415V 2¼"BSPX18" IMMERSION HEATER IP67 COVER 3X060200024006
LOOP TRIANGULAR 1X11"POCKET LOY BRASS HEAD STAR M5 FI-LINK020-STARY
28.8OHMPER ELEMENT

FOR ILLUSTRATION ONLY MODEL MAY NOT BE CORRECT IMMERSED LENGTH

DRAWING No.
FI06018C3E1TSTBR.dwg

DATE 25/10/2023

PRINTED 6/3/2026 8:28 AM

DRAWN BY Df

Last Saved by David.Fay

Date 29/08/24