THIS DRAWING IS CONSIDERED AS APPROVED IF NO SPECIFIC INSTRUCTIONS ARE RECEIVED WITHIN 2 DAYS OF ITS FORWARDING

DO NOT SCALE

SHEATHED HEATING ELEMENTS HAVE A STANDARD TOLERANCE OF +/-1% ON LENGTH . TOLERANCE WILL BE TAKEN UP ON ANY INTERNAL BEND TO MAINTAIN MAJOR OUTSIDE DIMENSIONS - UNLESS OTHERWISE STATED - FOR CLARIFICATION PLEASE ASK!

IF IN DOUBT

ASK!

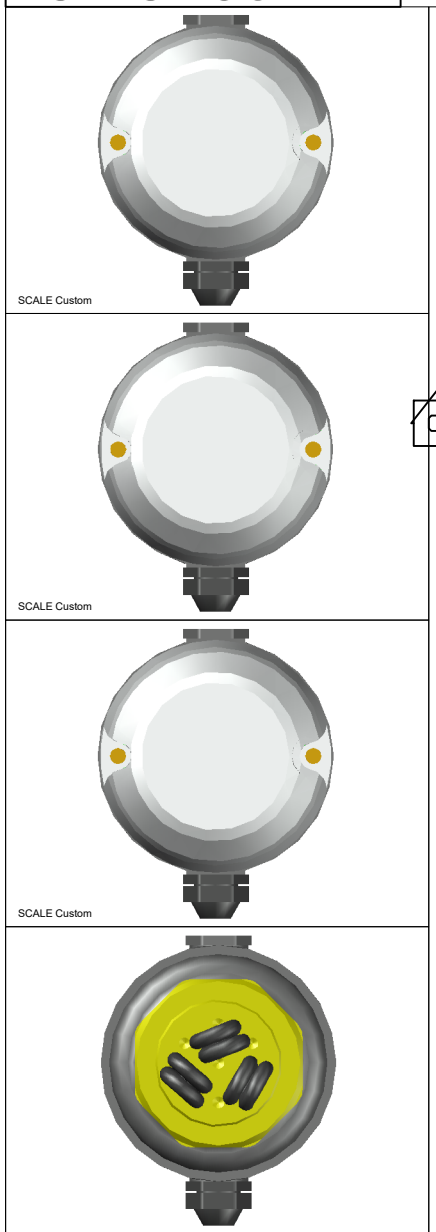

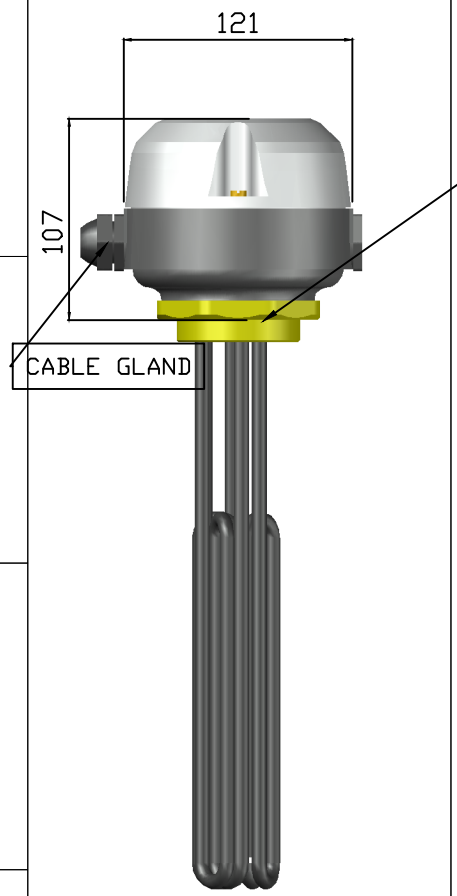

SCALE 1:4

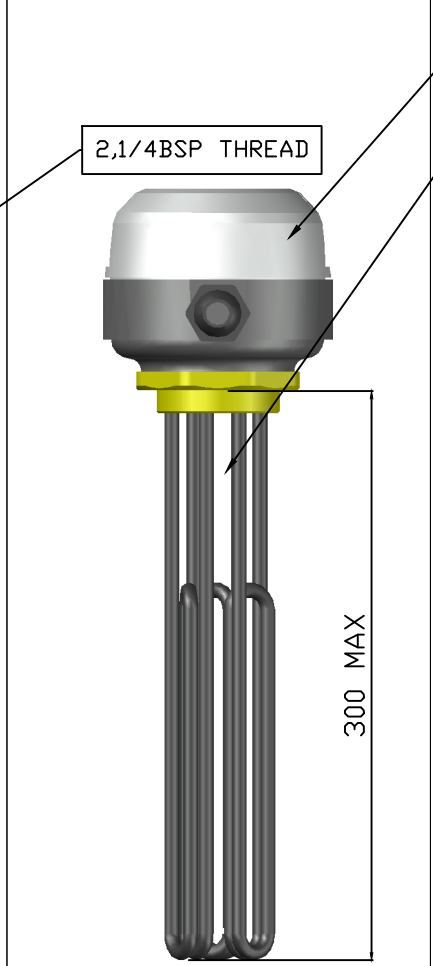

SCALE 1:4

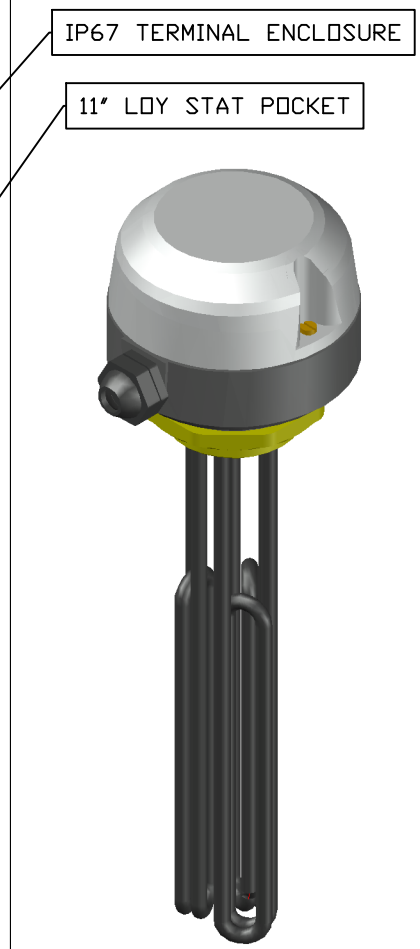

SCALE Custom

List of Xrefs:
ClientApproval: [G:\CADCOMPONENTS\ClientApproval.dwg]
FIBOX-ASSY-225 [G:\CADCOMPONENTS\FIBOX-ASSY-225.dwg]
GIHEAD225 [G:\CADCOMPONENTS\GIHEAD225.dwg]
FISMRT51 [G:\CADCOMPONENTS\FISMRT51.dwg]
FITOP51 [G:\CADCOMPONENTS\FITOP51.dwg]
GIORING [G:\CADCOMPONENTS\GIORING.dwg]
FI-GASKET51 [G:\CADCOMPONENTS\FI-GASKET51.dwg]
FI-LINK020-STARY [G:\CADCOMPONENTS\FI-LINK020-STARY125LCHHDB.dwg]
WASHERM8A [G:\CADCOMPONENTS\WASHERM8A.dwg]
GIGLANDM25 [G:\CADCOMPONENTS\GIGLANDM25.dwg]
GIGLANDM25BLANK [G:\CADCOMPONENTS\GIGLANDM25BLANK.dwg]
4BAX14MMXXXMMCE-BEAD-NUT [G:\CADCOMPONENTS\4BAX14MMXXXMMCE-BEAD-NUT.dwg]
BEAD08MM [G:\CADCOMPONENTS\BEAD08MM.dwg]
NUT4BAFULL [G:\CADCOMPONENTS\NUT4BAFULL.dwg]
POCKET11LOY [G:\CADCOMPONENTS\POCKET11LOY.dwg]
POCKET11SS [G:\CADCOMPONENTS\POCKET11SS.dwg]

COMPONENTS & REVISIONS é

IMMERSION HEATERS UK LTD ©
TEL 07897 246779

www.immersionheaters.uk
e-mail : sales@immersionheaters.uk

This drawing and information herein is confidential to TPFeg (Eckley) Ltd. It is issued in confidence that it will not be disclosed to any third party in part or in whole without permission from TPFeg (Eckley) Ltd.

Copyright 2023 TPFEG (EKELEY) LTD.

DESCRIPTION

IMM001 MULTI VIEW

MODEL REQUIRES UPDATE
3KW 240/415V 2¼"BSPX12" IMMERSION HEATER IP67 COVER 3XELEMENT LOOP TRIANGULAR 1X11"POCKET LOY BRASS HEAD STAR M5 FI-LINK020-STARY
57.6OHMPER ELEMENT
34 W/IN²

DRAWING No.
FI03012C3E1TSTBR.dwg

DATE 23/03/2023

PRINTED 17/10/2023 6:33 PM

DRAWN BY DF

Last Saved by David.Fay

Date 19/05/21